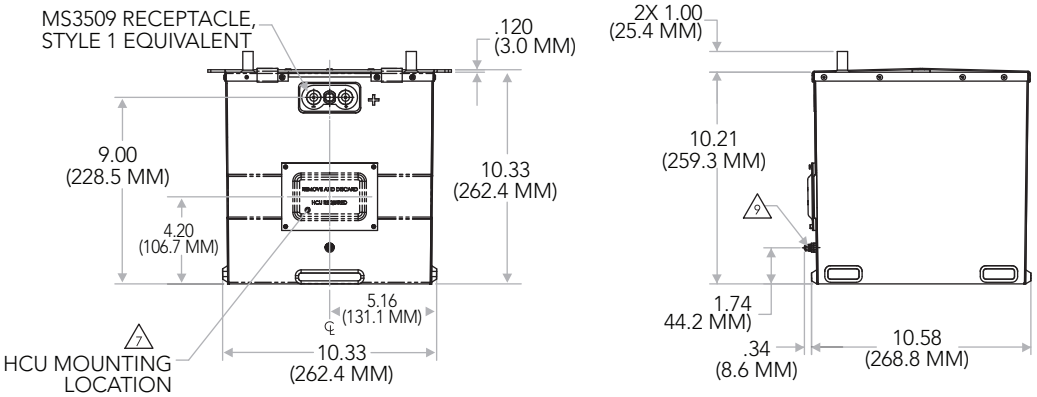
MS3509 RECEPTACLE,
STYLE 1 EQUIVALENT
.120
(3.0 MM)
9.00
(228.5 MM)
10.33
(262.4 MM)
4.20
(106.7 MM)
5.16
(131.1 MM)
7
HCU MOUNTING
LOCATION
10.33
(262.4 MM)
2X 1.00
(25.4 MM)
10.21
(259.3 MM)
9
1.74
44.2 MM)
.34
(8.6 MM)
10.58
(268.8 MM)